Harmony Collection

60″ Spanish Gray ☐ White ☐

A classic/elegant style with functional design–ample storage, under mount fittings and removable shelf.

Quartz top

4 Soft Close Doors
6 Soft Close Drawers

Corner Detail

Brushed Nickel Hardware

*Faucets not included

☐☐ Available in Spanish Gray or White

Item Code	Collection	Item Description
HA-V6022WH	Harmony	60″ Vanity - White
HA-V6022SG	Harmony	60″ Vanity - Spanish Gray
Recommended Vanity Countertops (Sold Separately)		
TQ-S6122W1 CQ-S6122C1	Quartz Tops	3/4″ - 61″ Pure White - Single Hole 3/4″ - 61″ Carrara Single Hole
Note: Quartz top includes Undermounted Rectangular Basin & 4″ Backsplash		

Harmony Collection

Harmony

60" Spanish Gray ☐
White ☐
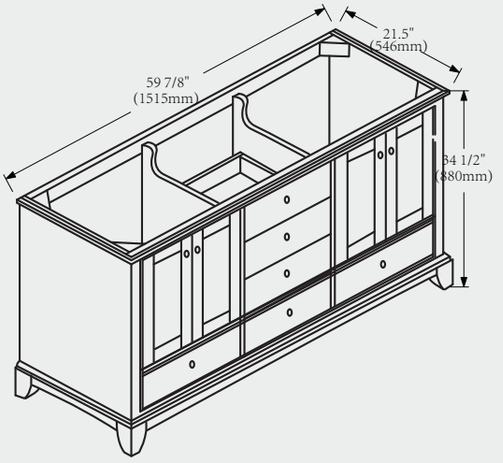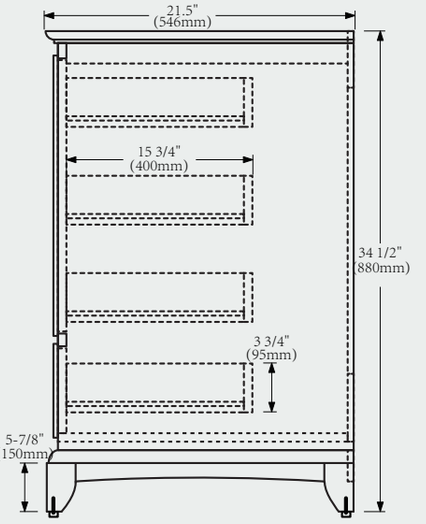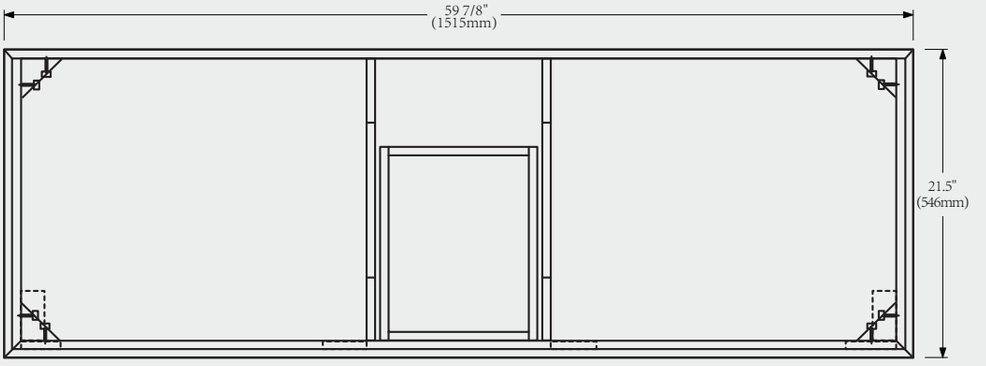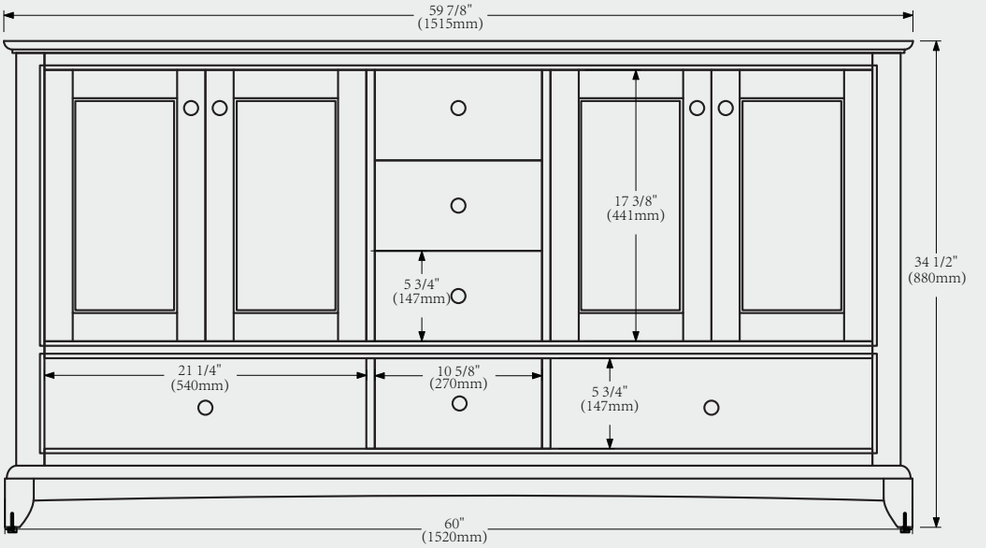
Harmony 60"